文献汇报

高铭阳

2020.03.05

Recurrent convolutional network for video-based smoke detection

Mengxia Yin[1] · Congyan Lang[1] · Zun Li[1] · Songhe Feng[1] · Tao Wang[1]

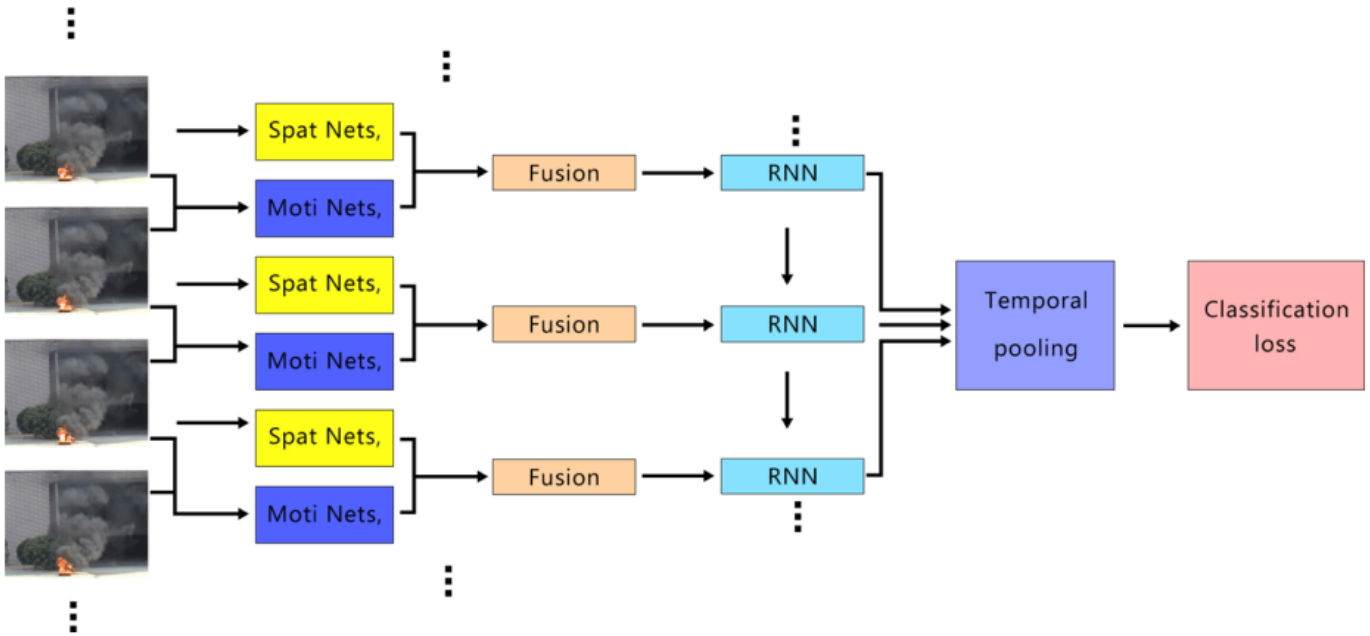

方法概述

为了有效地利用大范围的运动上下文信息，提出了一种基于视频的烟雾检测方法——递归神经网络(RNNs)。

该方法首先利用深度卷积运动空间网络捕获空间和运动上下文信息。然后利用时间池层和RNNs对烟雾模型进行有效训练。

更具体地说，在模型中，有两个独立的网络从源视频帧中学习空间表示和运动特征，分别称为空间网络和运动网络。最后，由于所提出的模型可以从源视频帧中学习空间表现和运动特征，所以我们选择在两个网络的全连接层之后融合相应的特征。此外，为了获得连续时间段的判别性运动上下文信息，通过RNNs对运动空间特征进行周期性的聚合，并通过时间池层增强RNNs，获得整个序列的长期上下文信息。

数据收集

现有的广泛使用的数据集，如b.c Ko的、Toreyin等人的和R.Vezzani的 。最大的数据集包含来自Toreyin等人的20个视频，平均每个视频不超过3分钟。b.c Ko的数据集包含16个视频片段，而R.Vezzani的数据集中有14个视频片段。这些视频不能覆盖复杂的场景。为了模拟真实世界场景，我们收集了大量的真实世界的视频通过搜索引擎使用关键字从网站。到目前为止，我们的数据集涵盖了来自不同城市的烟雾视频剪辑、复杂的真实场景和各种对象。

Fig. 2 Small smoke. Our dataset contains 1000 small smoke video clips with the smoke proportion of less than 20%

数据收集

Fig. 3 Samples of large smoke: with the proportion of more than 20%. They cover smoke videos from different cities, complex real-world scenes, and diverse objects

数据收集

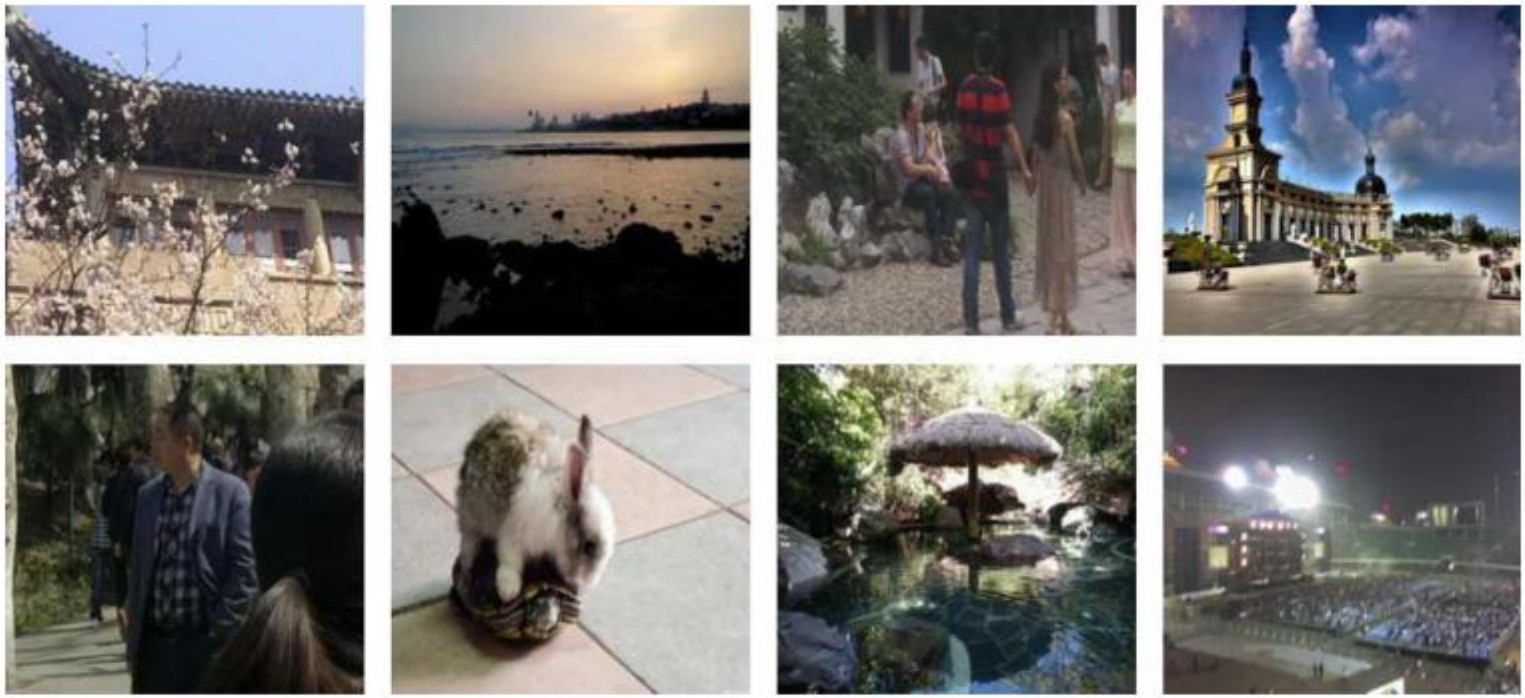

Fig. 4 Non-smoke samples. Non-smoke videos should be varied and abundant. A large number of real-world videos are collected from websites. The dataset contains a large number of images that are similar to smoke but are non-smoke in fact

网络结构——*Motion network*

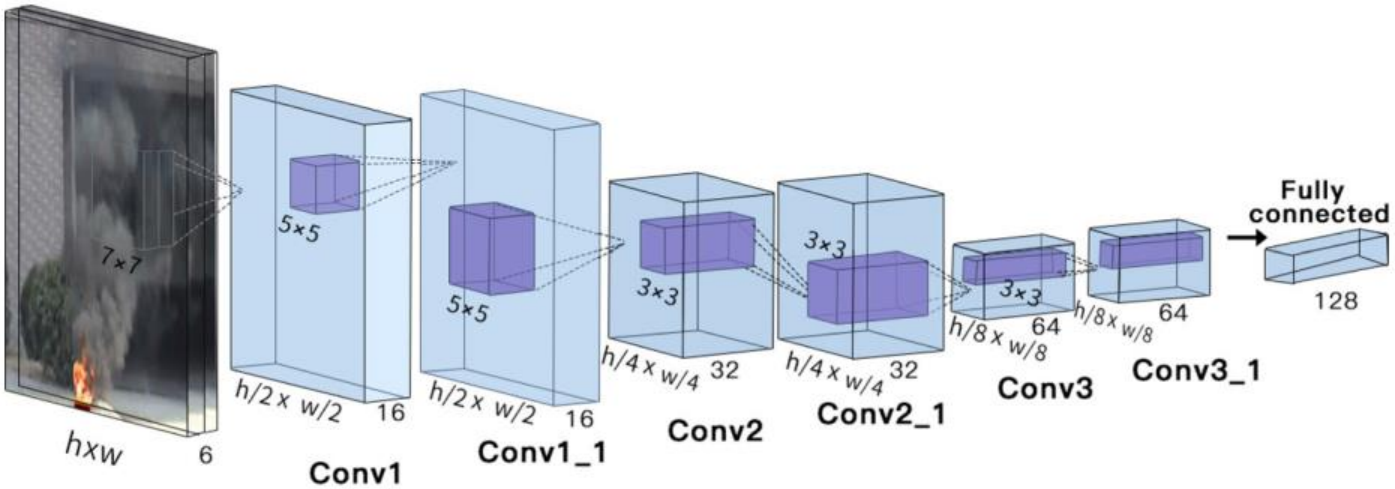

Fig. 6 The motion networks of our proposed RMSN consists of 6 convolutional layers (corresponding to Conv1, Conv1_1, Conv2, Conv2_1, Conv3 and Conv3_1) with stride of 2 in six of them and a tanh non-linearity layer after each layer. The inputs are two successive smoke frames with size of $h \times w \times 6$. And there is a fully-connected layer after the last convolutional layer. The purple cubes represent the convolutional kernels

网络结构——*Space network*

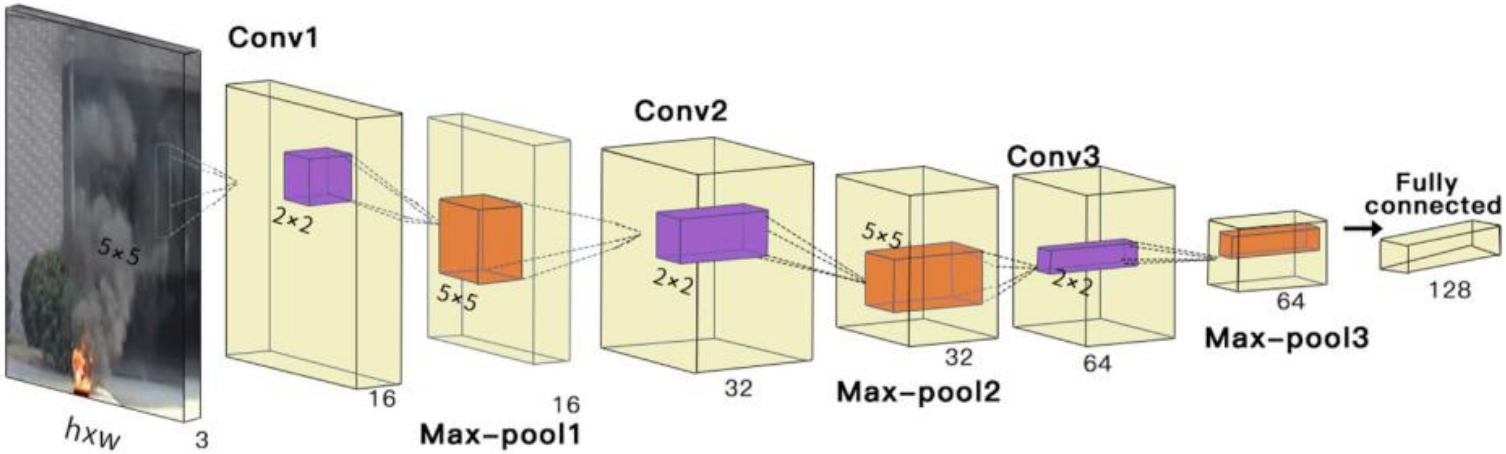

Fig. 7 Spatial networks of our proposed RMSN. It has 3 convolutional layers and 3 max-pooling layers with a tanh non-linearity layer interpolated after each convolutional layer. The fully-connected layer is the last layer of the network. The purple cubes are convolutional kernels while the red ones are pooling kernels

网络结构——*Motion-space feature fusion*

1、Concatenation fusion
2、Sum fusion
3、Max fusion

网络结构——*Motion context information aggregation*

representative together to train a model to detect smoke. Given the output $f^{(t)} \in R^{p\times 1}$ of the fused spatial and temporal network p-dimension, the RNNs can be defined as follows:

$$o^{(t)} = Mf^{(t)} + Nr^{(t-1)}, \tag{4}$$

$$r^{(t)} = \tanh(o^{(t)}). \tag{5}$$

where $o^{(t)} \in R^{q\times 1}$ is the q-dimensional output of RNNs at time-step t, and $r^{(t-1)} \in R^{q\times 1}$ contains the information of all previous time steps. M $\in R^{q\times p}$ and N $\in R^{q\times p}$ represent the corresponding parameters for $f^{(t)}$ and $r^{(t-1)}$ respectively, where q is the dimension of the output of the last fully-connected layer in fusion part and p is the dimension of the feature embedding-space.

Finally, we added a temporal pooling layer after the RNNs, so that we can capture all the time information over the whole video clips. Temporal pooling is to obtain long-term information throughout the whole sequence, which combines motion context information captured through the RNNs. In this paper, we adopt mean-pooling over the temporal dimension to produce a single feature vector u to represent the spatial and motion information averaged over the whole raw sequence. The pooling method is as follows:

$$u = \frac{1}{T}\sum_{t=1}^{T} o^{(t)}, \tag{6}$$

Table 6 Comparison between different methods with and without motion networks

Methods	B.C.Ko [14]		Toreyin et al. [32]		R. Vezzani [33]		BJTU-Smoke	
	TPR	TNR	TPR	TNR	TPR	TNR	TPR	TNR
Ours	0.9525	0.9853	0.9575	0.9895	0.9530	0.9780	0.9485	0.9720
Our method without motion net	0.9422	0.9725	0.9445	0.9785	0.9365	0.9635	0.9355	0.9625

Table 7 Comparison between different fusion methods and the model without recurrent units

Methods	Small smoke		Large smoke		All	
	TPR	TNR	TPR	TNR	TPR	TNR
Concatenation fusion	0.9450	0.9685	0.9520	0.9765	0.9485	0.9720
Sum fusion	0.9250	0.9420	0.9335	0.9450	0.9275	0.9435
Max fusion	0.9325	0.9475	0.9385	0.9490	0.9355	0.9485
Concatenation fusion without recurrent units	0.9220	0.9425	0.9325	0.9475	0.9285	0.9455